TAB. NO.	DESCRIPTION
	VB100

REVISIONS					
REV	DESCRIPTION	DRN:	DATE	CHKD:	APPD:

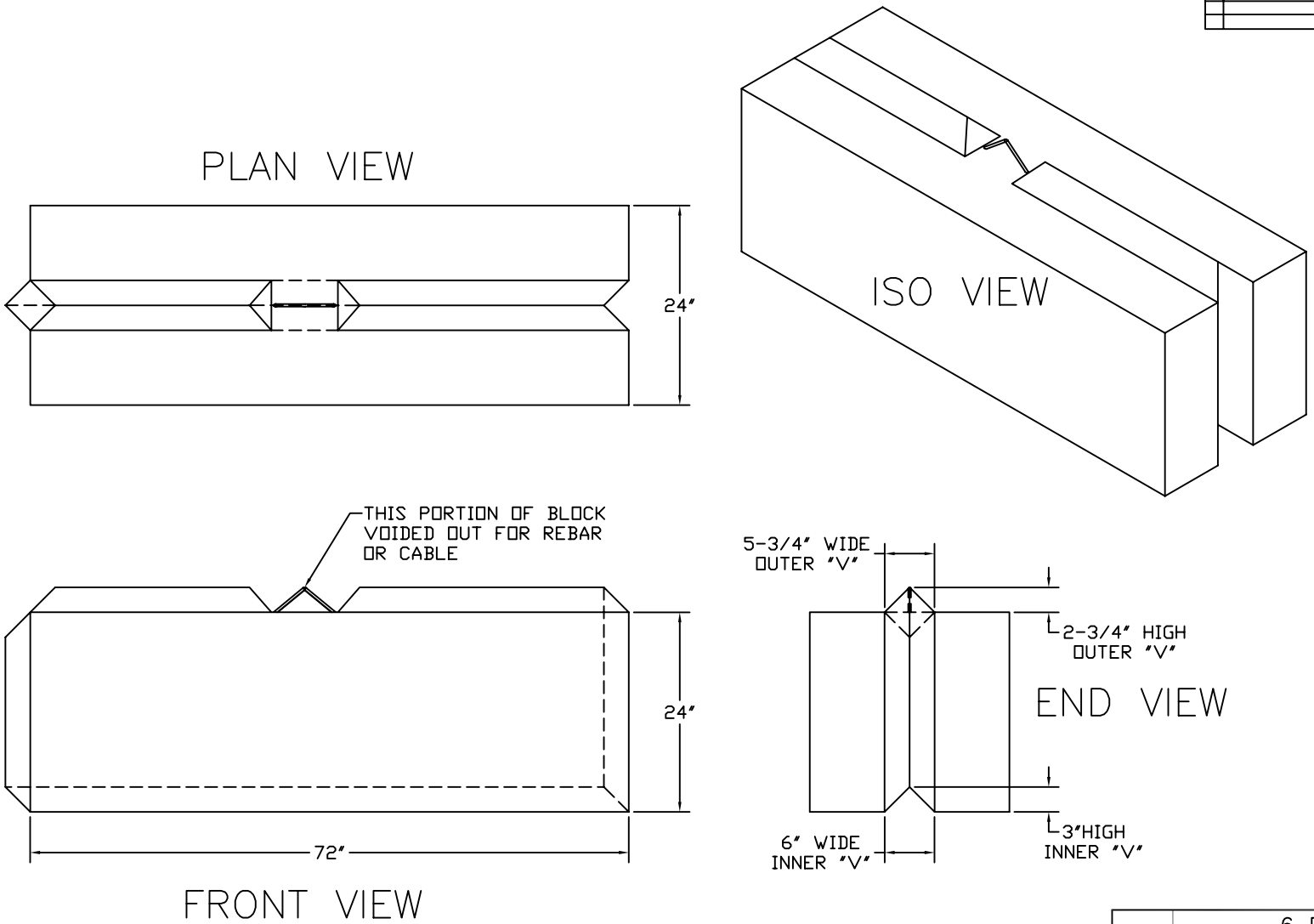

MATERIAL:	6 FT STRAIGHT BLOCK

DESIGN PRO INC.

THIS DRAWING CONTAINS CONFIDENTIAL AND PROPRIETARY INFORMATION OF D.P.I. NOT TO BE USED BY OR DISCLOSED TO ANY OTHER INDIVIDUAL OR LEGAL ENTITY WITHOUT AUTHORIZATION OF A REPRESENTATIVE OF D.P.I.

ASSEMBLIES, WELDMENTS, AND RAW MATERIAL TO BE FREE OF RUST	ORIG. J.Lucma	8/30/99
DEBURR & REMOVE ALL SHARP EDGES AND CORNERS	CHKD.	
STANDARD TOLERANCES & NOTES UNLESS OTHERWISE SPECIFIED	APPD.	
DIMENSIONS ARE IN INCHES	APPR. WEIGHT	
UNSPECIFIED TOLERANCES	MATERIAL	
.X ± .XX ± .XXX ± .XXXX ± ANGLES ± FRACTIONAL ±	FINISH	

DESIGN PRO INC

TITLE CONCRETE PRODUCTS 6' STRAIGHT BLOCK

GROUP | DO NOT SCALE DRAWING

SIZE D | NUMBER VB100 | REV

SCALE FULL | REF | SHT | OF